12.8V 100Ah

LFP Li-ion Battery



Dimension:

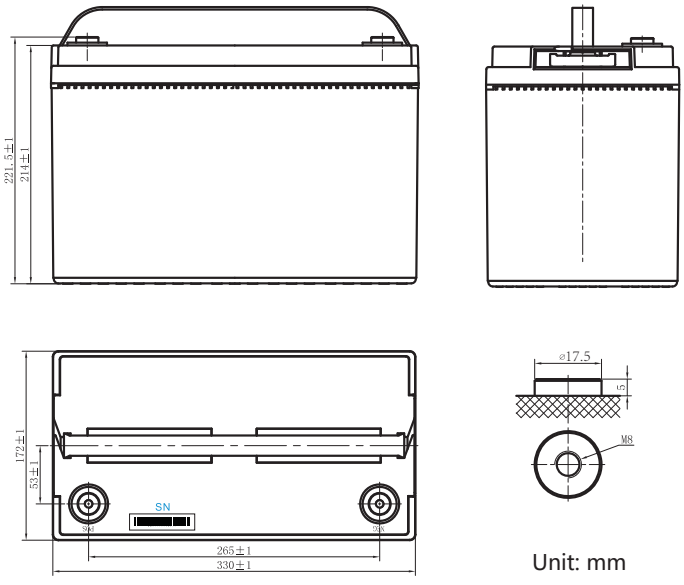

Unit: mm

SAFETY

+ Prismatic LiFePO4 cells (50Ah), High consistency, long cycle life and much more safety.
+ UN38.3, CE certification for system.
+ The cycle life over 3000 times @80%DOD

DESIGN

+ ABS container, replace VRLA battery perfectly.
+ Fast charge performance.
+ -20~+55° C widely temperature range.
+ Maintenance free.

BATTERY MANAGEMENT SYSTEM (BMS)

+ Integrated hardware BMS inside.
+ Independent protection for charge and discharge.
+ Over voltage, low voltage, over temperature and short circuit protection.

Hengyang Ritar Power Co., Ltd.
Hengyang Rich Power Co., Ltd.

No.1 Huagong Road, Songmu Industrial Park, Shigu District, Hengyang, Hunan, 421001, China

Version: 1.0

12.8V100Ah

Specification

Model	R-LFP12.8V100Ah
Part Number	8010128010001
Nominal Voltage [V]	12.8
Nominal Capacity [Ah]	100
Total Energy [Wh]	1280
Max. Charging Current [A]	100
Recommended Charging Current [A]	50
Charging Voltage [V]	14.6
Max. Discharging Current [A]	100
End of Dicharge Voltage [V]	11.2
Pulse Discharge Current	270A @ 10s
Dimension [W*D*H, mm]	330*172*214
Weight [Kg]	13.4
Operation Humidity	0~95% RH (No condensing)
Operating Temperature Range	Charge: 0 ~ +50 ℃; Discharge: -20 ~ +55 ℃
BMS Protection	Over charge Over discharge, Over temperature, Short circuit
Parallel Support	Yes, Max 2 Sets
Series Support	Yes, Max 4 Sets
Cycle Life	>3000
Designed Calendar Life	>10 Years
Certification	UN38.3, CE, MSDS

Note:
1. 80% DOD and to 80% of initial capacity.

The datasheet is subject to change without prior notification

For more information, contact with: sales@ritarpower.com

Hengyang Ritar Power Co., Ltd.
Hengyang Rich Power Co., Ltd.

No.1 Huagong Road, Songmu Industrial Park, Shigu District, Hengyang, Hunan, 421001, China